heimatec®

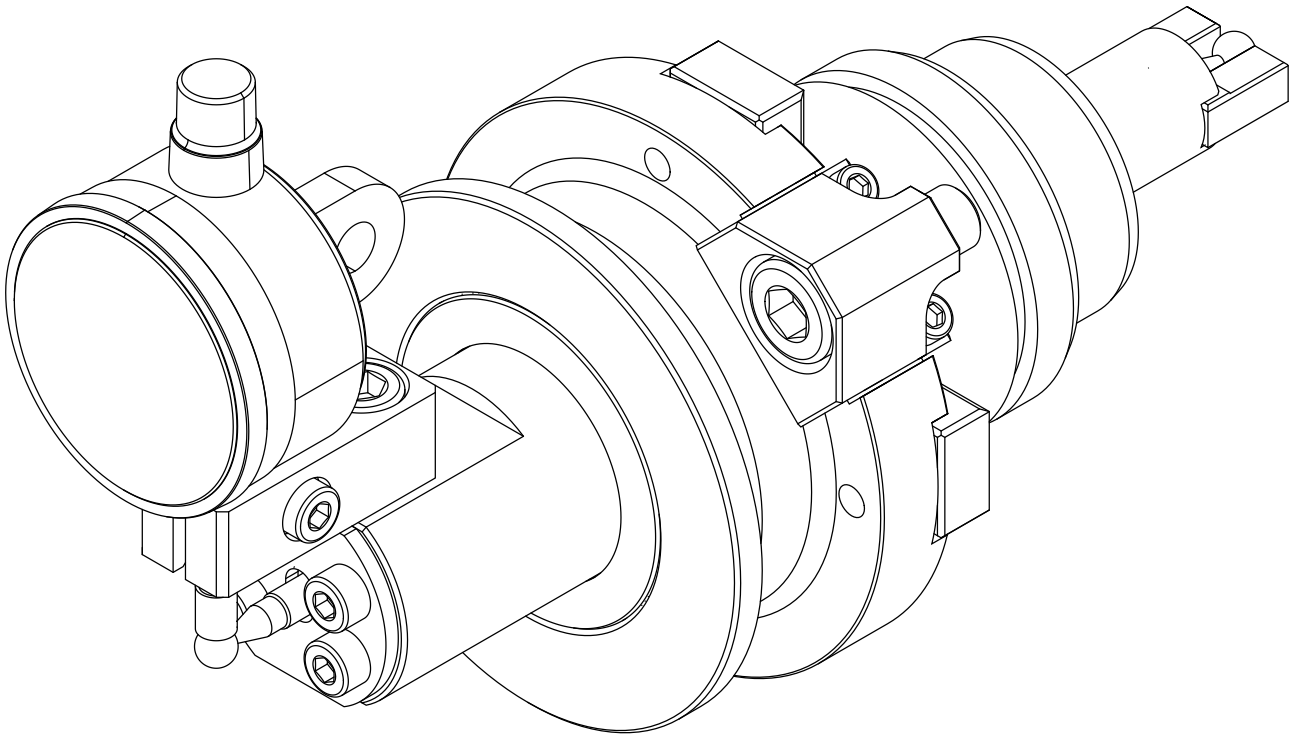

Translation of the original assembly instruction

Measuring device

V1.0 • 2026/11

1 About this manual ... 4
1.1 Purpose ... 4
1.2 Version information ... 4
1.3 Contact information ... 4
1.4 Information on the product ... 4
1.5 Other applicable documents ... 4
1.6 Means of representation ... 5
1.7 Warranty ... 5
1.8 Labeling/nameplate ... 6
2 Safety ... 7
2.1 Safety instructions ... 7
2.2 Warnings ... 8
2.2.1 Structure of the warnings ... 8
2.2.2 Meaning of the signal words and symbols ... 8
2.3 Personnel requirements ... 9
2.4 Protective devices ... 10
3 Overview ... 11
3.1 Intended use ... 11
3.2 Graphic description ... 11
3.3 Recommended tightening torques ... 12
3.4 Technical data ... 12
4 Transport, handling and storage ... 13
4.1 Transport method ... 13
4.2 Unpacking ... 13
4.3 Storage ... 13
5 Assembly and commissioning ... 14
5.1 Modification ... 15
5.2 Mounting in the machine ... 15
5.2.1 Interface ... 15
5.3 Setting up the product ... 16
5.4 Performing the measurement ... 16
6 Maintenance ... 18
6.1 Cleaning ... 18
7 Troubleshooting and repair ... 19
7.1 Action in case of faults ... 19
7.2 Repair ... 19
8 Disposal ... 20

1 About this manual

1.1 Purpose

The objective of this manual is to provide users with all necessary information to enable effective and safe use of the product during its entire life cycle.

This manual is directed at all persons who are assigned to transport, store, assemble, operate, maintain, troubleshoot, and dispose of the product.

1.2 Version information

The issue status of this manual is stated on the cover page and in the footers on every page.

Always keep and use the current version of all documentation. Use of an outdated version of this manual or the required and additional documentation can result in improper handling of the product.

1.3 Contact information

Manufacturer	heimatec GmbH
Address	Carl-Benz-Str. 4 77871 Renchen Germany
Phone	+49 7843 9466 0
Email	info@heimatec.com
Internet	www.heimatec.com

1.4 Information on the product

Name	Measuring device

1.5 Other applicable documents

- General Terms and Conditions of Business (T&C)
- Dimensioned drawing of the purchased product

The dimensioned drawing is tied to the revision of the product. Always use the serial number to search for the correct dimensioned drawing on the website.

The documents can be downloaded from www.heimatec.com.

1.6 Means of representation

The following presentation formats are used in this manual:

Instructions

Requirements for an instruction are represented with a checkmark.

The steps to be carried out are numbered.

Results of the individual steps are identified by an arrow. The overall result of an instruction is highlighted by a white arrow in a black circle.

Example

✓ Requirement

1. Instruction (Step 1)
2. Instruction (Step 2)
   ⇨ Result or system reaction to step 2
3. Instruction (Step 3)

➲ Overall result of the instruction

Lists

Lists without a mandatory order are shown as a list with bullet points.

Example

— Property A
  — Detail 1
  — Detail 2
— Property B
  — Detail 1
  — Detail 2

Cross references

Cross-references are represented by the name of the section, square parentheses, an arrow and the page number.

Example Means of representation [▸ 5]

1.7 Warranty

The implied warranty applies from the factory delivery date if the product is used as intended under the following conditions:

— Comply with the ambient and operating conditions
— The customer does not make any changes to the product
— Parts in contact with the workpiece and wear parts are not covered by the warranty

1.8 Labeling/nameplate

Each product delivered by heimatec has an item number (e.g. 8 030 56 072) and a serial number (z.B. 3747/24:01). Additional information may be provided, depending on the tool type.

Additional information such as:

- i = gear ratio
- n_{max} = speed
- p_{max} = max. coolant pressure (see also pxn diagrams under Version with low-pressure seal and Version with high-pressure seal)
- T_{max} = torque
- Product's direction of rotation from drive (n1) to output (n2)
  - = same direction (climb cutting)
  - ≠ opposite direction (against the feed)

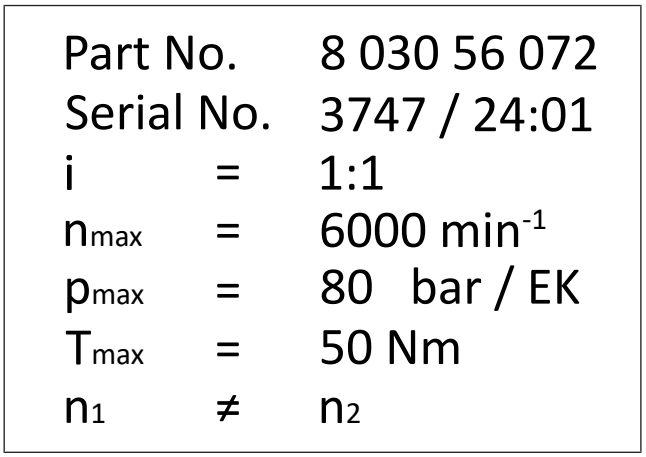

Fig. 1: Example of a nameplate

2 Safety

2.1 Safety instructions

This product is partly completed machinery as defined in the EU Machinery Directive 2006/42/EC. The product is intended for installation in a machine.

However, the product can nonetheless cause hazards if the safety instructions and warnings in the assembly manual are disregarded. The safety instructions in this section help you to avoid personal injuries and damage to property.

The owner/operating company must ensure that all safety instructions and warnings are understood and followed. Make sure that all persons who work with the product have read and understood the complete assembly manual before starting their work.

Improper handling can cause the product to pose dangers, which can lead to severe injuries and substantial damage to property.

Comply with the following safety instructions:

- Only qualified and instructed personnel may carry out work on the product
- Observe the country-specific accident prevention regulations and the general safety instructions, and comply with all provisions of the occupational safety law
- Only use the product in machines that meet the current safety regulations
- Use suitable assembly and transport equipment, and take precautions against getting jammed and crushing
- Use a suitable base/surface for repair and maintenance work and secure the product against unintentional movements
- Refrain from any way of working that has a negative effect on the product's functions and operating safety
- Do not expose the product to any corrosive fluids
- Only change cutting tools outside the machine tool
- Before starting up the product, secure the danger zone with a suitable protection measure
- During operation, do not reach into the open mechanisms and movement area of the product
- Check important components for damage before each use
- Do not use damaged products

2.2 Warnings

Preceding warnings

Warnings that relate to a certain part or section of the assembly manual (for example, all steps of a whole instruction), are at the beginning of the respective part.

Integrated warnings

Warnings that only relate to one part of a section (for example, to an individual step of an instruction), are at the relevant place within a section.

2.2.1 Structure of the warnings

All warnings in this document are structured as follows:

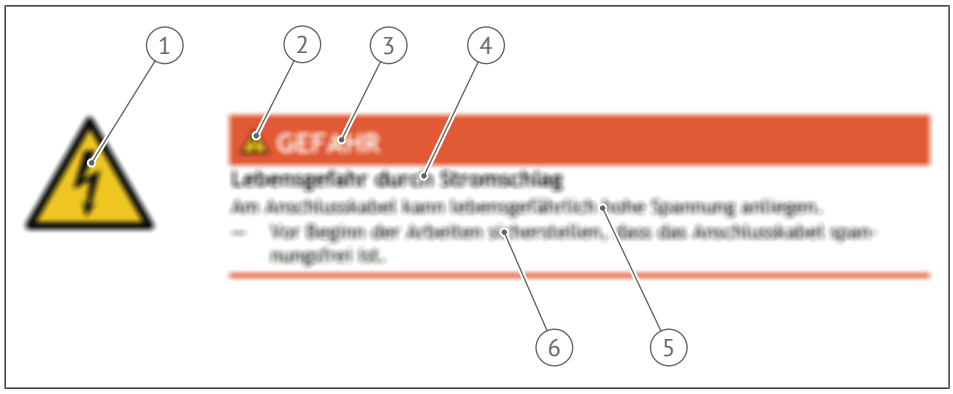

Fig. 2: Structure of the warnings

1	Hazard-specific symbol	2	Hazard symbol
3	Signal word	4	Type and source of the danger
5	Possible consequences if disregarded	6	Procedure to prevent the hazard

2.2.2 Meaning of the signal words and symbols

The following signal words are used in this document:

Signal word	Meaning, consequences if not prevented
DANGER	Indicates a dangerous situation that results in death or serious injuries.
WARNING	Indicates a potentially dangerous situation that could result in death or serious injuries.
CAUTION	Indicates a potentially dangerous situation that could result in minor or slight injuries.
NOTICE	Indicates a potentially dangerous situation that could result in damage to property or the environment.

Tab. 1: Meaning of the signal words

The following symbols for hazards, warnings, mandatory requirements, and prohibitions are used in this document:

Symbol	Meaning
	General warning of a hazard
	Warning: Hot surface
	Warning: Sharp edges
	Warning: Electromagnetic fields

Tab. 2: Warning sign

2.3 Personnel requirements

The product is intended for use by qualified personnel only. It is assumed that they have skills in use of this tool system.

The operating personnel must meet the following requirements:

- The personnel must follow the safety instructions and heed warnings of danger
- The personnel must keep the machine and the workplace clean
- Unauthorized persons must keep away from the machine

Persons whose responsiveness is influenced, for example, by drugs, alcohol, or medication may not work on or at the machine.

Qualifications

The tasks described in this manual set certain requirements for the qualifications of the assigned personnel. Inadequately qualified personnel are unable to assess the risks involved in handling the machine correctly and expose themselves and others to the risk of injuries. The presence of inadequately qualified personnel in the work area/danger zone of the product is prohibited.

Qualified personnel

Qualified personnel are persons whose technical training, knowledge, and experience, as well as their knowledge of the relevant standards and provisions, enable them to carry out and evaluate the work assigned to them, and to identify potential hazards independently. These persons are familiar with the product's assembly manual. Qualified personnel are mechanics, electricians, mechatronics technicians, and technicians.

Personal protective equipment

Personal protective equipment is used/worn to protect the health and safety of persons during their work. Note and follow the relevant regulations for the higher-level area (control station, hall, etc.). The specified protective equipment must be worn.

- Wear protective gloves and goggles when handling hazardous substances
- In case of moving components, wear close-fitting protective clothing and additional hairnet for long hair
- Always wear suitable protective equipment such as protective gloves, safety footwear, and work clothing with close-fitting sleeves

2.4 Protective devices

As soon as the product is installed in a suitable machine, the protective devices of this machine take effect.

3 Overview

3.1 Intended use

The product is intended exclusively for measuring any offset between the axis of the drive coupling and the positioning axis of the mounting interface on the tool-holder of a lathe.

Intended use also includes the following points:

- The product may only be used within the scope of its technical data
- The product is intended for installation in a machine
- The applicable guidelines and directives on installation in a machine must be noted and complied with
- Follow all safety and assembly instructions

Deviating use of the product is deemed to be not intended use or rather misuse. The manufacturer is not liable for any resulting damage.

3.2 Graphic description

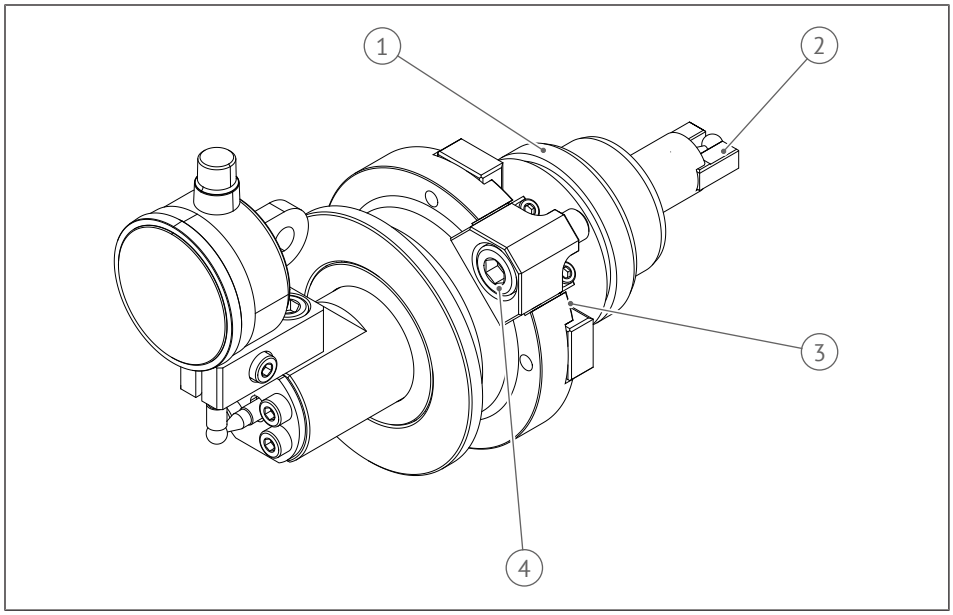

Fig. 3: Components overview

1	Parallel shank	2	Tool coupling
3	Contact surface	4	Fastening screw

3.3 Recommended tightening torques

Recommended tightening torques for cylinder head screws

Thread	Coefficient of friction	Strength class		
		8.8	**10.9**	**12.9**
M4	0.14	3 Nm	4 Nm	5 Nm
M5	0.14	6 Nm	8 Nm	10 Nm
M6	0.14	10 Nm	14 Nm	17 Nm
M8	0.14	25 Nm	35 Nm	42 Nm
M10	0.14	50 Nm	71 Nm	85 Nm
M12	0.14	87 Nm	122 Nm	147 Nm
M16	0.14	210 Nm	300 Nm	360 Nm

Tab. 3: Tightening torques for cylinder head screws



NOTICE

The recommended tightening torques for countersunk screws are 20% smaller.

3.4 Technical data

Parameter	Value
Cooling lubricant	Quality according to ISO 4406:1999 Code 17/15/12, SAE 749 Class 3 or NAS 1638 Class 6 maximum particle size 50 µm
Pressurizing fluid	If sealing air is present, compressed air quality to ISO 8573- 1:2010 [7:4:4]
Max. coolant pressure	See dimensioned drawing and refer to pxn diagrams (see Version with low-pressure seal and Version with high-pressure seal section)
Max. speed	See dimensioned drawing
Max. torque	See dimensioned drawing
Ambient temperature	+5 °C to +50 °C
Humidity	⩽ 75 %
Max. on-time	See section On-time
Weight	Use a suitable balance to measure

4 Transport, handling and storage

4.1 Transport method



⚠ WARNING

Risk of injury from improper transport

Improper behavior during transport can cause the product to pose risks, which can lead to severe injuries and substantial damage to property.

- Transport with an appropriate means of transport.
- Secure the product against falling during transport and handling.
- Do not step under overhead loads.
- Only lift products heavier than 20 kg with lifting gear and note the center of gravity of the product.
- Observe the country-specific accident prevention regulations and the general safety instructions.
- Comply with all provisions of labor safety law.

4.2 Unpacking

The product is sent in a package. The package contains the following:

- Product
- Fastenings for mounting the product in the machine
- Packaging fillers for safe transport
- Operating tool

A corrosion inhibitor has been applied on the product.

1. Open the package and remove the product.
2. Position the product on a nonslip surface to secure it against falling.

Keep the package and the packaging fillers so that you can safely return the product if necessary.

4.3 Storage

- Keep the product and its accessories in a clean and dry environment.
- Protect the surfaces of the product from dirt and rust, for example, with a corrosion inhibitor.
- Protect the tool interface with a suitable cover.
- Before placing it in storage and during storage, turn all movable parts of the product one a month to avoid contact corrosion in the bearings and sticking of the seals, etc.

5 Assembly and commissioning



⚠ WARNING

Unexpected movement due to energy supply

If the energy supply is switched on or there is still residual energy in the system, components can move unexpectedly and cause severe injuries.

- Switch off the energy supply, make sure that there is no longer any residual energy present and secure against reconnection.
- Carry out maintenance, modification, and attachment work outside the danger zone determined by the movement area.



⚠ WARNING

Risk of injury from ejected parts

During operation, ejected objects can cause severe injuries and even death. Where products have a large mass and/or projecting length, it is possible for the system to reach its natural frequency, and thus damage the bearing. The machining tool or parts of it can be ejected with high kinetic energy.

- Secure the danger zone.
- Do not enter the danger zone during operation.
- Make sure that the product and accessories are clamped properly.
- Always clamp/chuck tools as short as possible.



⚠ CAUTION

Risk of injury from heated product

Increased temperatures can occur during operation. Contact with the product can cause burns.

- Wait until the product has cooled.
- Keep to the allowable on-time.
- Wear suitable protective gloves.



⚠ CAUTION

Cutting, grazing, or knocking against sharp corners and edges, and rough surfaces

When changing cutting tools, people can cut, graze themselves or knock against sharp corners and edges.

- Work in a safety-conscious and be fully aware of the dangers.
- Only change cutting tools outside the machine tool.
- Before handling the cutting tool, remove or cover it together with the tool unit.
- Wear suitable personal protective equipment.

5.1 Modification

Modifications, changes, and rework, for example, additional threads, holes, safety devices, can have a negative effect on function or safety, or cause damage to the product.

Carry out structural changes only with the written approval of heimatec.

5.2 Mounting in the machine

Before mounting

Note the following points:

1. Check whether the product's drive matches the machine toolholder's coupling.
2. Examine the product for damage. Do not use the product if it is clearly damaged.
3. Make sure that the contact surfaces of the product and the machine's toolholder are clean and free from chips and coolant residues. Do not use compressed air for cleaning.

5.2.1 Interface

1. Move measuring ball 1 to the center of the spindle by hand so that the product can engage with the machine tool coupling without being damaged.
2. Press the product onto the contact surface of the toolholder.
3. Tighten the fastening screw.

➲ The product is mounted.

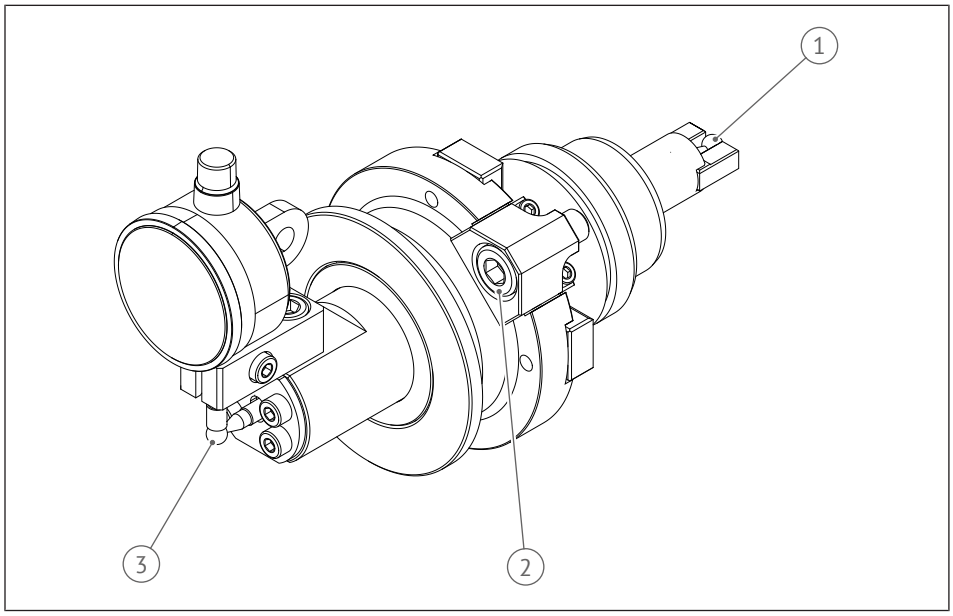

Fig. 4: Interface

1	Measuring ball 2	2	Fastening screw
3	Measuring ball 1		

5.3 Setting up the product

1. Insert the dial indicator into the dial indicator holder and secure it with the dial indicator fastening screw.
2. Make sure that measuring ball 1 is aligned with the contact point of the dial indicator.

➲ The product is set up.

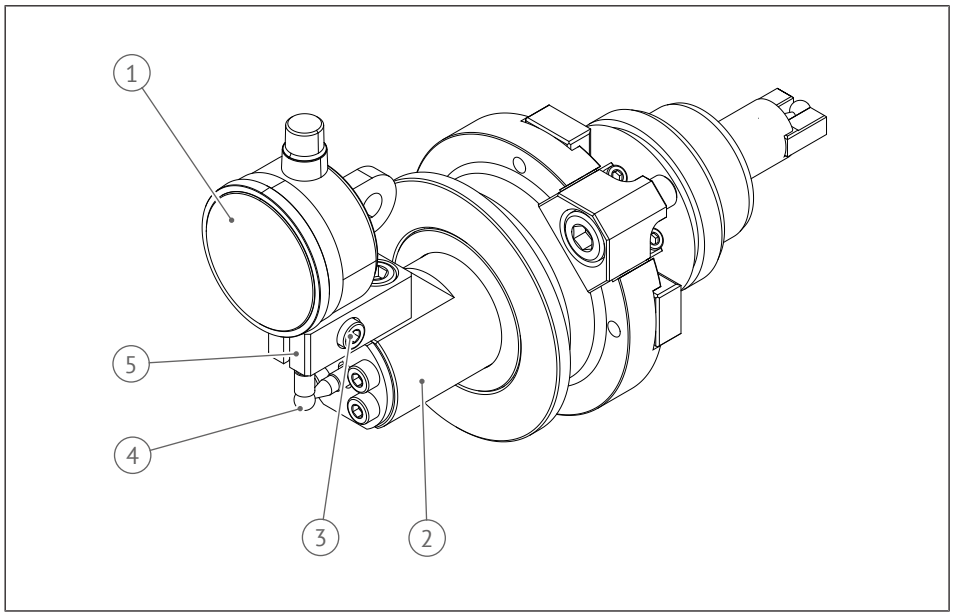

Fig. 5: Setting up the product

1	Dial indicator	2	Spindle
3	Dial indicator fastening screw	4	Measuring ball 1
5	Dial indicator holder		

5.4 Performing the measurement

The product can be used to determine the offset in the y and z directions between the axis of the drive coupling and the positioning axis of the mounting interface on a lathe turret. Follow the steps below to determine the axis offset.

Note: The spindle is mounted so that it can rotate. Do not turn the spindle faster than 5 rpm. The housing remains mounted in the same position throughout the measurement.

1. Turn the spindle. Note: If the spindle is turned by hand, the machine drive must be disconnected from the power supply.
2. Read the displacement indicated by the dial indicator in the y and z directions. There are four measurement points in total.
3. For each of the two directions, y and z, calculate the difference between the two readings. Half of the result is the axis offset in the respective direction.

Example

Turn the spindle to the 0°, 90°, 180°, and 270° positions (see illustration). In this example, the dial indicator shows the following values:

0°	0 mm	y direction
90°	0.5 mm	z direction
180°	0.4 mm	y direction
270°	−0.1 mm	z direction

Calculation of the axis offset in the y direction: (0 mm − 0.4 mm)/2 = −0.2 mm

Calculation of the axis offset in the z direction: (0.5 mm − (−0.1 mm))/2 = 0.3 mm

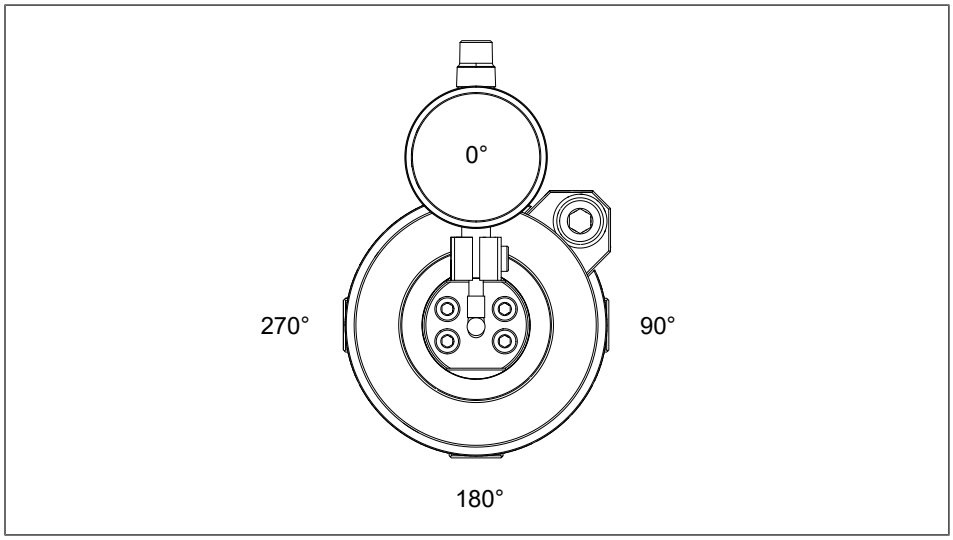

Fig. 6: Spindle positions

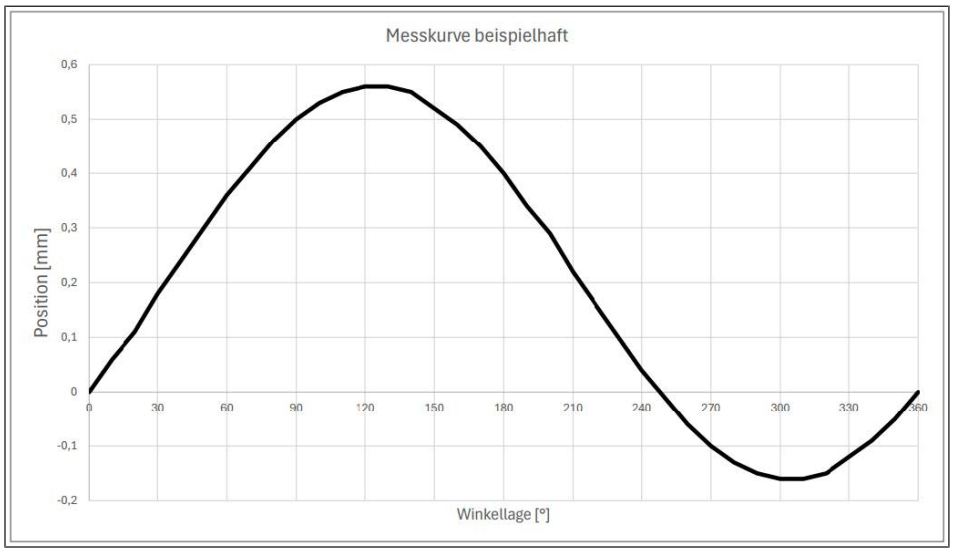

Fig. 7: Example measurement curve

6 Maintenance



⚠ WARNING

Unexpected movement due to energy supply

If the energy supply is switched on or there is still residual energy in the system, components can move unexpectedly and cause severe injuries.

– Switch off the energy supply, make sure that there is no longer any residual energy present and secure against reconnection.
– Carry out maintenance, modification, and attachment work outside the danger zone determined by the movement area.

6.1 Cleaning



NOTICE

Material damage from incorrect cleaning

Cleaning with compressed air can cause material damage.

– Only use clean cloths for cleaning.

Cleaning Clean the product every 30 operating hours at the latest to maintain the high quality and accuracy.

7 Troubleshooting and repair

7.1 Action in case of faults

Note the following if faults occur:

- Remove the product from operation immediately and report the fault to the responsible positions/persons.
- Have the faults corrected by personnel trained for this purpose.
- Do not restart the product until the fault has been removed.
- After a fault, check that the product still functions and no enhanced hazards have resulted.
- If you are unable to correct the fault, contact the manufacturer (service@heimatec.com) and provide the following details:
  - Order/item number
  - heimatec serial number
  - Brief details of the damage features

7.2 Repair



NOTICE

Material damage from non-approved replacement parts

Use of replacement parts that have not been approved by the manufacturer can cause hazards for the personnel and product damage or malfunctions.

- Only use original replacement parts and replacement parts approved by the manufacturer.
- Only heimatec's own service centers and authorized service workshops may repair these products (service@heimatec.com).

8 Disposal

Improper disposal can cause the product to pose dangers, which can lead to severe injuries, substantial damage to property and environmental damage.

- Recycle or properly dispose of the components of the product according to the local regulations
- Do not dispose of the product in normal household waste
- Contact heimatec in case of any uncertainties

Notes



heimatec®

heimatec GmbH
Präzisionswerkzeuge
Carl-Benz-Str. 4
77871 Renchen
Germany

T: +49 7843 9466 0

info@heimatec.com
www.heimatec.com

The contact details of our worldwide trading partners can be found on our website: www.heimatec.com/handelspartner